WARMFLOW

# Cylinder Manual

**Incorporating:** **User Instructions**
**Installation Instructions**
**Commissioning Instructions**
**Maintenance Instructions**

# Unvented Cylinders

**Mains pressure water heaters**

**EN 12897:2006**

**Products covered by this manual:**

| | | | | | | | |
|---|---|---|---|---|---|---|---|
| **Direct** | DI90UV | DI120UV | DI150UV | DI180UV | DI210UV | DI250UV | DI300UV |
| **Indirect** | IN120UV | IN150UV | IN180UV | IN210UV | IN250UV | IN300UV | |
| **Eco Direct** | ED180UV | ED210UV | ED250UV | ED300UV | | | |
| **Twin Coil** | TW180UV | TW210UV | TW250UV | TW300UV | | | |
| **Triple Coil** | TR250UV | TR300UV | | | | | |

**LEAVE THIS MANUAL WITH THE END USER**

## INSTALLATION, COMMISSIONING & SERVICING

This appliance must be installed as described herein and the installation commissioned by competent persons as instructed. The Guarantee Registration section of the separate Cylinder Passport supplied with the product must be completed and the Guarantee Registration only returned to the manufacturer with proof of purchase (e.g. receipts / invoices).

This appliance must be serviced annually by competent persons, the Service Record section of the separate Cylinder Passport completed on each occasion and proof of servicing (e.g. receipts / invoices) retained.

The complete guarantee policy statement is included in Section 9, page 21.

**FAILURE TO COMMISSION, REGISTER AND ANNUALLY SERVICE THIS PRODUCT WILL INVALIDATE ALL GUARANTEES**

## TECHNICAL, SPARES & GUARANTEE CLAIMS

For technical advice about the installation, commissioning, servicing or use of this appliance, please contact the Warmflow Customer Care Centre by post, phone, fax or email at the addresses below. Please also refer to our website.

Should replacement components be required, a list of available spares is provided in Section 8.3, page 19.

In the unlikely event that replacement components might be required within the guarantee period, please notify the Customer Care Centre in writing, by post, fax or email, stating the nature of the fault and the part number of the replacement components required.

**Warmflow Customer Care Centre**

Warmflow Engineering
Lissue Industrial Estate
Moira Road
Lisburn
BT28 2RF
Northern Ireland

**Telephone**

| | |
|---|---|
| United Kingdom: | 028 9262 1515 |
| Republic of Ireland: | 048 9262 1515 |

**Facsimile**

| | |
|---|---|
| United Kingdom: | 028 9262 0869 |
| Republic of Ireland: | 048 9262 0869 |

**Email**

technical@warmflow.co.uk

**Website**

www.warmflow.co.uk

# CONTENTS


**1 User Instructions ..... 2**

1.1 Cylinder Thermostat ..... 2
1.2 Immersion Thermostat ..... 2
1.3 Discharge ..... 2

**2 Installation Requirements ..... 3**

**3 Handling and Storage ..... 4**

**4 Standard Equipment ..... 4**

**5 Technical Data ..... 4**

5.1 General ..... 4
5.2 Direct Cylinders ..... 5
5.3 Indirect Cylinders ..... 6
5.4 Eco Direct Cylinders ..... 7
5.5 Twin Coil Cylinders ..... 8
5.6 Triple Coil Cylinders ..... 9

**6 Installation ..... 10**

6.1 Cylinder Location ..... 10
6.2 Hot & Cold Water Connections ..... 10
6.3 Primary, Renewable & Tertiary Circuits ..... 11
6.4 Tundish ..... 11
6.5 Expansion Vessel ..... 11
6.6 Hard water ..... 11
6.7 Pipework Configurations ..... 12
6.8 Discharge Pipework ..... 13
6.9 Worked Example ..... 15
6.10 Electrical Installation ..... 16

**7 Commissioning ..... 18**

7.1 Draining ..... 18

**8 Maintenance ..... 19**

8.1 Regular Maintenance ..... 19
8.2 Inspection Access ..... 19
8.3 Replacement Parts ..... 19
8.4 Fault Finding ..... 20

**9 Guarantee ..... 21**

**10 End-of-Life Information ..... 22**

10.1 Safety Risks ..... 22
10.2 Disassembly of the Product ..... 22
10.3 Casing and key components ..... 23

# 1 USER INSTRUCTIONS

This appliance is not intended for use by persons (including children) with reduced physical, sensory or mental capabilities, or lack of experience and knowledge, unless they have been given supervision or instruction concerning use of the appliance by a person responsible for their safety. Children should be supervised to ensure that they do not play with the appliance.

The temperature of the hot water can be adjusted, and should ideally be set to 60°C (the position indicated in the diagram below). A higher setting uses more energy and more fuel.

When a hot tap is turned on there may be a short surge of water – this is quite normal with unvented systems and does not mean there is a fault. When you first fill a basin the water may sometimes appear milky. This is due to air bubbles in the water which will clear very quickly.

## 1.1 Cylinder Thermostat

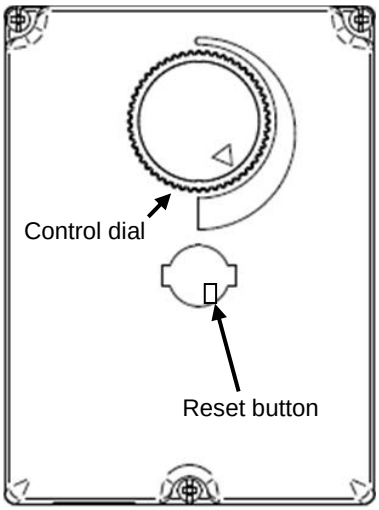


All cylinders (except Direct models) are fitted with one or more cylinder thermostats to control the heat input to the cylinder from a remote heat source, such as a boiler, heat pump or solar thermal installation. The temperature of each cylinder thermostat is adjustable between ***nominally*** 40°C and 70°C. Turn the control knob clockwise to increase temperature, and anticlockwise to decrease.

Each cylinder thermostat has a built-in manually reset safety thermostat which will 'lock out' in the event of the cylinder overheating and which will need to be reset in order to restore operation. Remove the lock-out cover and depress the red button to reset.

## 1.2 Immersion Thermostat

⚠ Isolate ALL electrical supplies to the appliance before removing the immersion cover.

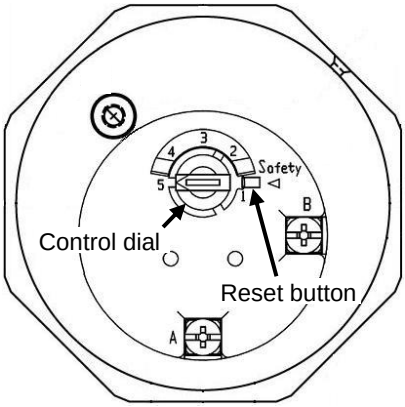


All cylinders are supplied with one or more immersion heaters to allow the cylinder to be heated electrically. Each immersion heater has an immersion thermostat, the temperature of which is adjustable between ***nominally*** 10°C and 70°C. Remove the immersion heater cover and turn the control dial anticlockwise to increase temperature, and clockwise to decrease.
Each immersion thermostat also has a built-in manually reset safety thermostat which will 'lock out' in the event of the cylinder overheating and which will need to be reset in order to restore operation. Remove the immersion heater cover and depress the red button to reset.

## 1.3 Discharge

If cold/warm water is discharged from the cylinder via the tundish, call your installer.

⚠ If very hot water is discharged, **immediately** switch off ALL heat sources (which may include boilers, heat pumps, solar thermal systems and immersion heaters), isolate their electrical supplies and call your installer.

The pressure relief valves should be operated regularly to remove lime deposits and to verify they are not blocked.

# 2 INSTALLATION REQUIREMENTS

Prior to installing this unvented hot water cylinder, please confirm that:

a) The mains water supply is capable of achieving a minimum flow rate of 20 litres per minute at a minimum dynamic pressure of 1.5 bar **at all times**. If this performance cannot be achieved the installation of an unvented cylinder may not be suitable.
b) The maximum mains supply pressure **at any time** does not exceed 12 bar. If this is the case an additional 'special' pressure reducing valve (not supplied) may be required.
c) The mains water supply is from a public source (i.e. not from a private borehole) and that the hardness of the water is less than 200 mg/litre. Where hardness in excess of 200 mg/litre is experienced, a suitable and effective hard water treatment must be installed.
d) All circuits supplying heat to the heat exchanger coils of any cylinder (not applicable to direct cylinders) are fully pumped (gravity circulation is NOT suitable).
e) The pipework supplying the hot water taps is capable of withstanding a maximum pressure of 7 bar at a temperature of 90°C.

This appliance must be installed vertically (not on its side) in a frost-free indoor location.

The installation of this appliance is subject to the Building Regulations:

| | |
|---|---|
| England & Wales | Building Regulation G3 |
| Scotland | Technical Standard P3 |
| Northern Ireland | Building Regulations P5 |
| Republic of Ireland | Technical Guidance Document Part L |

The appliance and installation must be commissioned as described herein and the Guarantee Registration section of the separate Cylinder Passport completed and returned to the manufacturer.

**FAILURE TO COMMISSION, REGISTER AND ANNUALLY SERVICE THIS PRODUCT WILL INVALIDATE ALL GUARANTEES**

⚠ Under no circumstances must the factory fitted temperature & pressure relief valve be removed. Removal of the valve would create an **extremely dangerous** situation and would invalidate all guarantees.

# 3 HANDLING AND STORAGE

Prior to installation this product should be handled with care and stored upright in a dry location and in its original packaging.

# 4 STANDARD EQUIPMENT

Before commencing installation check that all the listed components have been supplied:

1. Temperature & pressure relief valve (factory-fitted)
2. Control thermostats (factory-fitted) (not applicable to Direct models)
3. Unvented kit including:
    a. Inlet group
    b. Expansion vessel
    c. Tundish
4. Immersion heater(s) (packaged inside the unvented kit)

One 2-port motorised zone valve is supplied with Indirect, Twin Coil and Triple Coil models only, for use on the primary circuit.

Note: This stainless steel cylinder requires no corrosion protection device e.g. anode.

# 5 TECHNICAL DATA

## 5.1 General

| | Direct | Indirect | Eco Direct | Twin Coil | Triple Coil |
|---|---|---|---|---|---|
| OPERATING DATA | | | | | |
| Operating pressure (bar) | 3.0 | 3.0 | 3.0 | 3.0 | 3.0 |
| Maximum design pressure (bar) | 6.0 | 6.0 | 6.0 | 6.0 | 6.0 |
| Maximum supply pressure to inlet group (bar) | 12.0 | 12.0 | 12.0 | 12.0 | 12.0 |
| Expansion vessel bladder pre-charge pressure (bar) | 3.0 | 3.0 | 3.0 | 3.0 | 3.0 |
| SAFETY DEVICE SETTINGS | | | | | |
| Pressure reducing valve (bar) | 3.0 | 3.0 | 3.0 | 3.0 | 3.0 |
| Expansion valve (bar) | 6.0 | 6.0 | 6.0 | 6.0 | 6.0 |
| Cylinder thermostat limit temperature (°C) | n/a | 80 | 80 | 80 | 80 |
| Immersion thermostat limit temperature (°C) | 80 | 80 | 80 | 80 | 80 |
| Temperature & pressure relief (T&P) valve (°C / bar) | 90/7.0 | 90/7.0 | 90/7.0 | 90/7.0 | 90/7.0 |
| T&P valve temperature probe length (mm) | 102 | 102 | 102 | 102 | 102 |
| HEAT TRANSFER COILS | | | | | |
| Maximum circuit temperature (renewable coil) (°C) | n/a | n/a | 120 | 120 | 120 |
| Maximum circuit temperature (other coils) (°C) | n/a | 85 | n/a | 85 | 85 |
| Maximum circuit pressure (all coils) (bar) | n/a | 6.0 | 6.0 | 6.0 | 6.0 |

**Table 1: General data (Indirect & Twin Coil models)**

## 5.2 Direct Cylinders

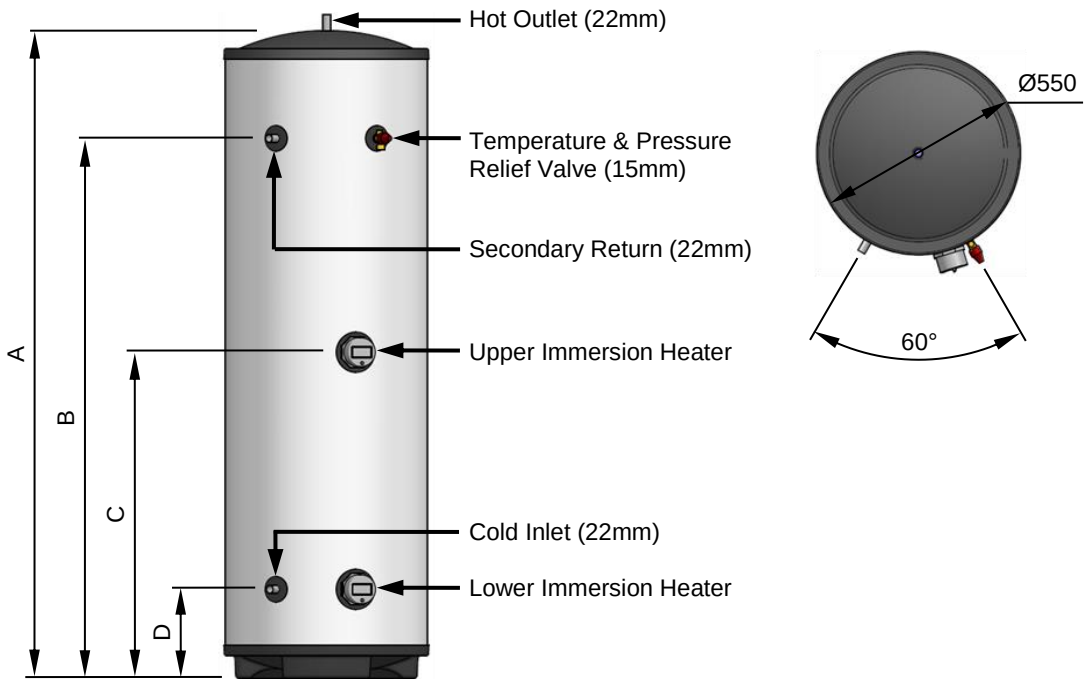


**Figure 1: Direct cylinders components & dimensions**

| | DI90UV | DI120UV | DI150UV | DI180UV | DI210UV | DI250UV | DI300UV |
|---|---|---|---|---|---|---|---|
| DIMENSIONS | | | | | | | |
| (A) Height (mm) | 767 | 952 | 1142 | 1327 | 1517 | 1767 | 2077 |
| (B) Secondary return connection / T&P (mm) | n/a | n/a | n/a | n/a | 1223 | 1473 | 1783 |
| (C) Upper immersion (mm) | n/a | 482 | 577 | 670 | 765 | 890 | 1045 |
| (D) Cold inlet connection / Lower immersion (mm) | 243 | 243 | 243 | 243 | 243 | 243 | 243 |
| OPERATING DATA | | | | | | | |
| Cold water capacity (litres) | 90 | 120 | 150 | 180 | 210 | 250 | 300 |
| Weight when full (kg) | 110 | 140 | 180 | 210 | 240 | 290 | 350 |
| Standing heat loss (kWh/24h) | 0.92 | 1.15 | 1.31 | 1.40 | 1.66 | 1.92 | 2.07 |
| PERFORMANCE | | | | | | | |
| Heat up time by lower immersion only (mins) | 89 | 121 | 154 | 198 | 237 | 287 | 345 |
| FICHE DATA | | | | | | | |
| Supplier Name | Warmfllow | | | | | | |
| Supplier Model Identifier | DI90 | DI120 | DI150 | DI180 | DI210 | DI250 | DI300 |
| Declared Load Profile | M | M | M | L | L | XL | XL |
| Energy Efficiency Class | D | E | D | C | D | C | C |
| Water Heating Energy Efficiency, ηwh (%) | 34 | 30 | 36 | 38 | 37 | 39 | 39 |
| Annual Electrical Consumption, AEC (kWh) | 1541 | 1742 | 1452 | 2745 | 2799 | 4369 | 4351 |
| Thermostat Setting (°C) | 60 | 60 | 60 | 60 | 60 | 60 | 60 |
| Sound Power Level (dB) | 15 | 15 | 15 | 15 | 15 | 15 | 15 |

**Table 2: Direct cylinder data**

## 5.3 Indirect Cylinders

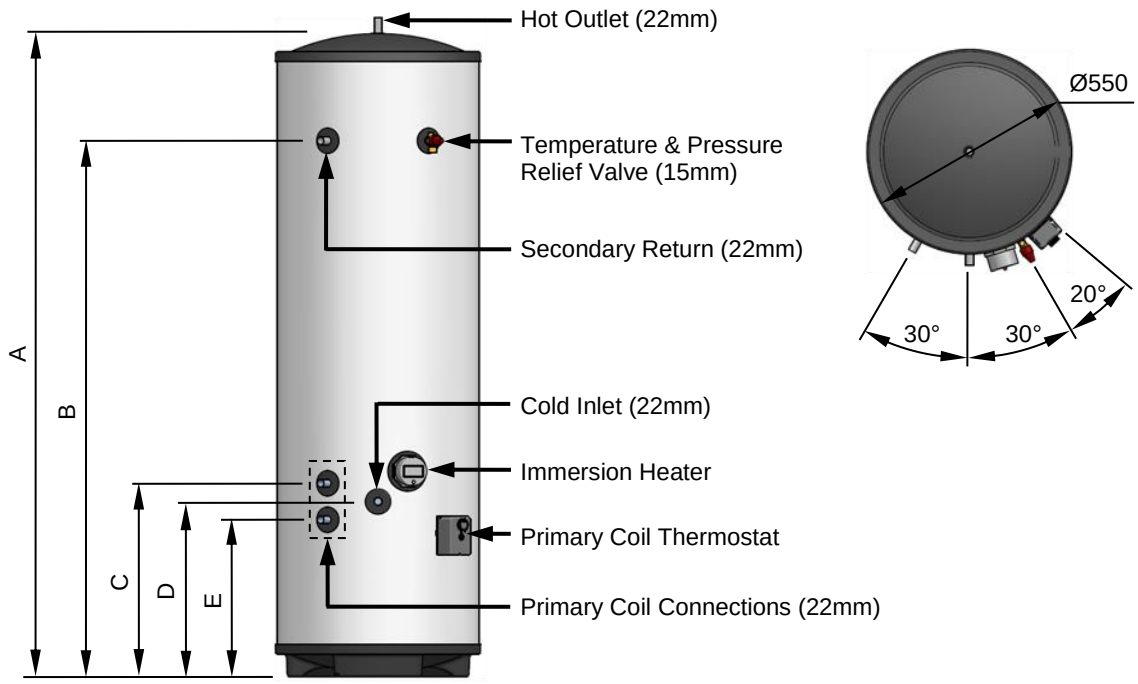


**Figure 2: Indirect cylinders components & dimensions**

| | IN120UV | IN150UV | IN180UV | IN210UV | IN250UV | IN300UV |
|---|---|---|---|---|---|---|
| DIMENSIONS | | | | | | |
| (A) Height (mm) | 952 | 1142 | 1327 | 1517 | 1767 | 2077 |
| (B) Secondary return connection (mm) | n/a | n/a | n/a | 1223 | 1473 | 1783 |
| (C) Primary coil upper connection (mm) | 462 | 462 | 532 | 532 | 532 | 532 |
| (D) Cold inlet connection (mm) | 412 | 412 | 482 | 482 | 482 | 482 |
| (E) Primary coil lower connection (mm) | 362 | 362 | 432 | 432 | 432 | 432 |
| OPERATING DATA | | | | | | |
| Cold water capacity (litres) | 120 | 150 | 180 | 210 | 250 | 300 |
| Weight when full (kg) | 140 | 180 | 210 | 250 | 290 | 350 |
| Standing heat loss (kWh/24h) | 1.15 | 1.31 | 1.40 | 1.66 | 1.92 | 2.07 |
| COIL PERFORMANCE (EN12897) | | | | | | |
| Primary coil rating @ 15L/min (kW) | 17.5 | 17.2 | 21.3 | 19.9 | 22.2 | 20.4 |
| Primary coil pressure drop @ 15L/min (mbar) | 54 | 54 | 67 | 67 | 67 | 67 |
| Heat up time by primary coil (mins) | 19.1 | 24.9 | 24.7 | 31.4 | 33.6 | 41.4 |
| FICHE DATA | | | | | | |
| Supplier Name | Warmflow | | | | | |
| Supplier Model Identifier | IN120 | IN150 | IN180 | IN210 | IN250 | IN300 |
| Energy Efficiency Class | A | B | B | B | C | C |
| Standing Loss (W) | 36 | 55 | 58 | 60 | 84 | 86 |
| Storage Volume (litres) | 115 | 146 | 175 | 205 | 245 | 290 |

**Table 3: Indirect cylinder data**

## 5.4 Eco Direct Cylinders

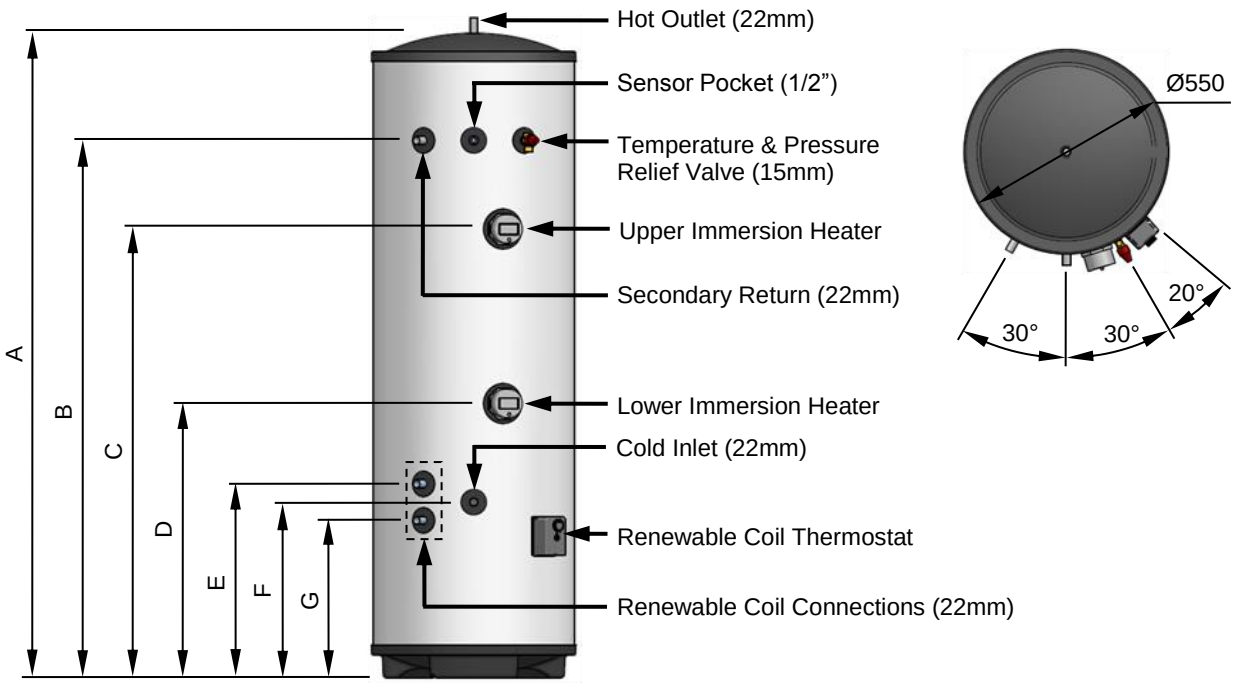


**Figure 3: Eco Direct cylinders components & dimensions**

| | ED180UV | ED210UV | ED250UV | ED300UV |
|---|---|---|---|---|
| DIMENSIONS | | | | |
| (A) Height (mm) | 1327 | 1517 | 1767 | 2077 |
| (B) Secondary return connection (mm) | n/a | 1223 | 1473 | 1783 |
| (C) Upper immersion (mm) | 891 | 1078 | 1230 | 1540 |
| (D) Lower immersion (mm) | 596 | 752 | 752 | 1062 |
| (E) Renewable coil upper connection (mm) | 532 | 532 | 532 | 532 |
| (F) Cold inlet connection (mm) | 482 | 482 | 482 | 482 |
| (G) Renewable coil lower connection (mm) | 432 | 432 | 432 | 432 |
| OPERATING DATA | | | | |
| Cold water capacity (litres) | 180 | 210 | 250 | 300 |
| Weight when full (kg) | 210 | 250 | 290 | 350 |
| Standing heat loss (kWh/24h) | 1.40 | 1.66 | 1.92 | 2.07 |
| PERFORMANCE | | | | |
| Renewable coil rating @ 15L/min (kW) | 21.4 | 20.2 | 21.8 | 19.3 |
| Renewable coil pressure drop @ 15L/min (mbar) | 67 | 67 | 67 | 67 |
| Heat up time by lower immersion only (mins) | 127 | 138 | 184 | 188 |
| Dedicated renewable volume (litres) | 65 | 90 | 110 | 145 |
| FICHE DATA | | | | |
| Supplier Name | Warmflow | | | |
| Supplier Model Identifier | ED180 | ED210 | ED250 | ED300 |
| Energy Efficiency Class | B | B | C | C |
| Standing Loss (W) | 58 | 60 | 84 | 86 |
| Storage Volume (litres) | 175 | 205 | 245 | 290 |

**Table 4: Eco Direct cylinder data**

## 5.5 Twin Coil Cylinders

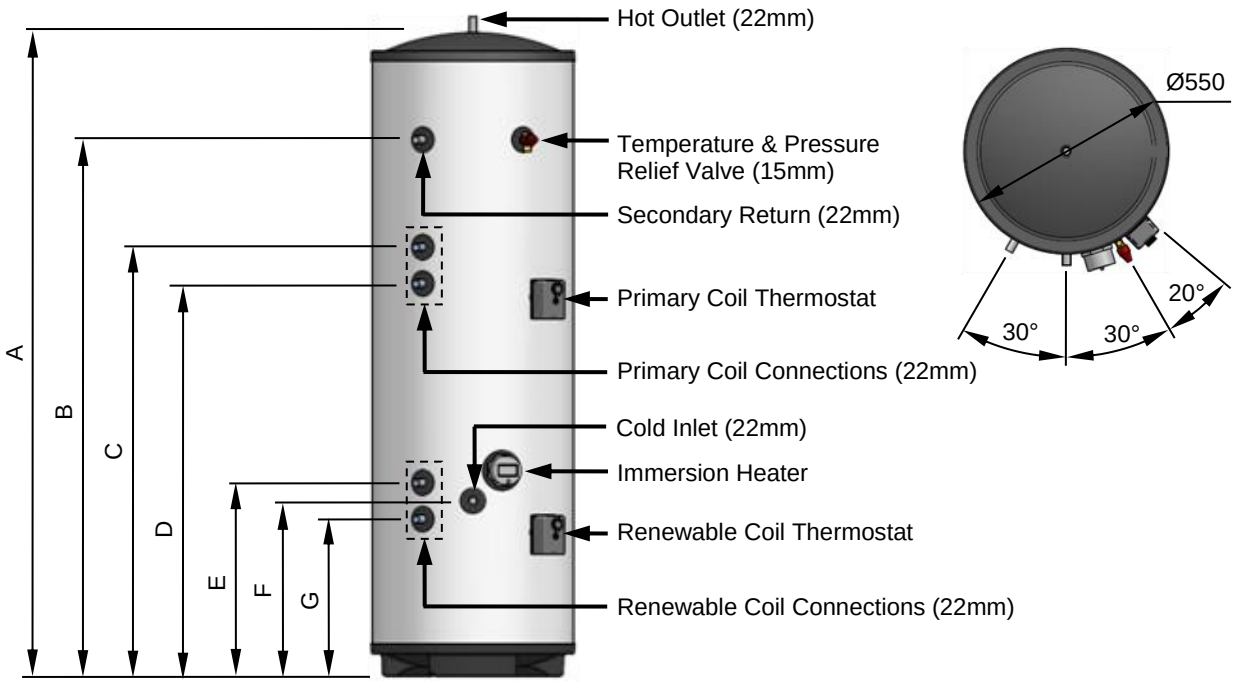


**Figure 4: Twin Coil cylinders components & dimensions**

| | TW180UV | TW210UV | TW250UV | TW300UV |
|---|---|---|---|---|
| DIMENSIONS | | | | |
| (A) Height (mm) | 1327 | 1517 | 1767 | 2077 |
| (B) Secondary return connection (mm) | n/a | 1223 | 1473 | 1783 |
| (C) Primary coil upper connection (mm) | 973 | 1078 | 1078 | 1388 |
| (D) Primary coil lower connection (mm) | 873 | 978 | 978 | 1288 |
| (F) Renewable coil upper connection (mm) | 532 | 532 | 532 | 532 |
| (F) Cold inlet connection (mm) | 482 | 482 | 482 | 482 |
| (G) Renewable coil lower connection (mm) | 432 | 432 | 432 | 432 |
| OPERATING DATA | | | | |
| Cold water capacity (litres) | 180 | 210 | 250 | 300 |
| Weight when full (kg) | 210 | 250 | 290 | 350 |
| Standing heat loss (kWh/24h) | 1.40 | 1.66 | 1.92 | 2.07 |
| COIL PERFORMANCE (EN12897) | | | | |
| Primary coil rating @ 15L/min (kW) | 20.7 | 21.3 | 20.2 | 21.0 |
| Primary coil pressure drop @ 15L/min (mbar) | 54 | 54 | 54 | 54 |
| Heat up time by primary coil @ 15L/min (mins) | 15.7 | 16.3 | 22.6 | 21.9 |
| Renewable coil rating @ 15L/min (kW) | 20.7 | 22.3 | 22.0 | 20.7 |
| Renewable coil pressure drop @ 15L/min (mbar) | 67 | 67 | 67 | 67 |
| Dedicated renewable volume (litres) | 70 | 105 | 105 | 155 |
| FICHE DATA | | | | |
| Supplier Name | Warmflow | | | |
| Supplier Model Identifier | TW180 | TW210 | TW250 | TW300 |
| Energy Efficiency Class | B | B | C | C |
| Standing Loss (W) | 58 | 60 | 84 | 86 |
| Storage Volume (litres) | 175 | 205 | 245 | 290 |

**Table 5: Twin Coil cylinder data**

## 5.6 Triple Coil Cylinders

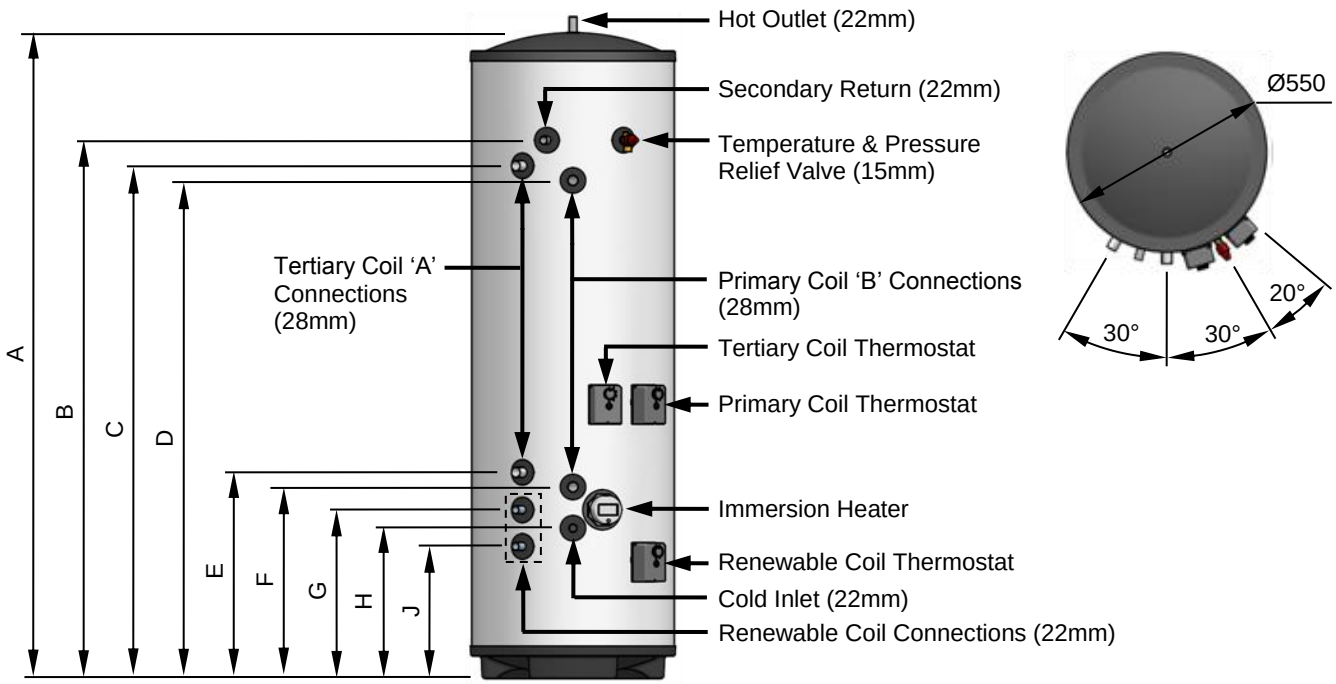


**Figure 5: Triple Coil cylinders components & dimensions**

| | TR250UV | TR300UV |
|---|---|---|
| DIMENSIONS | | |
| (A) Height (mm) | 1767 | 2077 |
| (B) Secondary return connection (mm) | 1473 | 1783 |
| (C) Tertiary coil 'A' upper connection (mm) | 1403 | 1683 |
| (D) Primary coil 'B' upper connection (mm) | 1363 | 1643 |
| (E) Tertiary coil 'A' lower connection (mm) | 564 | 844 |
| (F) Primary coil 'B' lower connection (mm) | 524 | 804 |
| (G) Renewable coil upper connection (mm) | 462 | 532 |
| (H) Cold inlet connection (mm) | 412 | 482 |
| (J) Renewable coil lower connection (mm) | 362 | 432 |
| OPERATING DATA | | |
| Cold water capacity (litres) | 248 | 298 |
| Weight when full (kg) | 290 | 350 |
| Standing heat loss (kWh/24h) | 1.92 | 2.07 |
| COIL PERFORMANCE (EN12897) | | |
| Tertiary coil 'A' rating @ 15L/min (kW) | 18.9 | 20.1 |
| Tertiary coil 'A' pressure drop @ 15L/min (mbar) | 16 | 16 |
| Heat up time by Tertiary coil 'A' @ 15L/min (mins) | 25.7 | 24.6 |
| Primary coil 'B' rating @ 15L/min (kW) | 18.2 | 19.2 |
| Primary coil 'B' pressure drop @ 15L/min (mbar) | 16 | 16 |
| Heat up time by Primary coil 'B' @ 15L/min (mins) | 27.9 | 26.9 |
| Renewable coil rating @ 15L/min (kW) | 20.0 | 20.9 |
| Renewable coil pressure drop @ 15L/min (mbar) | 54 | 67 |
| Dedicated renewable volume (litres) | 70 | 115 |
| FICHE DATA | | |
| Supplier Name | Warmflow | |
| Supplier Model Identifier | TR250 | TR300 |
| Energy Efficiency Class | C | C |
| Standing Loss (W) | 84 | 86 |
| Storage Volume (litres) | 245 | 290 |

**Table 6: Triple Coil cylinder data**

# 6 INSTALLATION

## 6.1 Cylinder Location

The unit can be located in any convenient, frost-free, indoor location. As it is connected directly to the mains water supply it is equally efficient on any floor – ground, first, second, etc. The unit can be fitted into a conventional airing cupboard and does not require any additional insulation or ventilation.

When selecting a location, consideration should be given to the routing of the discharge pipe and to the relative location of the heat sources (solar panels, heat pumps or boilers) as well as to the main outlets – pipe runs should be kept as short as possible for maximum economy, especially hot water discharge pipes running down from the unit.

Ensure the cylinder is positioned such that future servicing and part replacement is possible. The routing of pipework must not prevent thermostats, immersion heaters, temperature & pressure relief valve, inlet group or expansion vessel from being removed for maintenance.

## 6.2 Hot & Cold Water Connections

⚠ The factory-fitted temperature and pressure relief valve must NOT be removed from the cylinder or tampered with in any way. The valve is pre-calibrated to operate at 7 bar or 90°C and any attempt to adjust or remove it will invalidate the guarantee and could adversely affect the safety of the appliance.

All connections to the cylinder must be made using compression fittings. Mains supply pipework must be a minimum of 22mm diameter to provide adequate flow rate.

### 6.2.1 Inlet group

The inlet group (supplied) must be fitted on the cold water mains prior to the unit. When connecting the inlet group, ensure the arrow on the body is pointing in the direction of flow (towards the cylinder).

The maximum supply pressure to the inlet group is 12 bar. If the mains supply pressure is likely to exceed 12 bar **at any time**, an additional suitable pressure reducing valve (not supplied) will be required.

A balanced cold connection is provided on the inlet group, from which the cold water supply to the rest of the property can be connected to provide balanced supply pressure throughout. If this facility is not required, the connection should be capped / stop-ended.

### 6.2.2 Stop cock & drain

Install a full bore stop cock or ball valve (not supplied) before the inlet group assembly on the incoming mains water supply so the unit can be isolated when required. A full bore drain cock (not supplied) must be fitted to the supply pipework, between the cylinder and the inlet group, at as low a level as possible, to facilitate draining (see Figure 6).

### 6.2.3 Distribution pipework

Pipework supplying the hot water taps must be capable of withstanding a maximum pressure of 7 bar at a temperature of 90°C and should be run in 22mm throughout the property. Only short lengths (max 1 metre) of 15mm should be used to connect baths, showers and basin taps. If using a secondary / pumped return circuit, all pipework must be well insulated. The circulator (bronze pump) should be time and/or temperature controlled to reduce energy consumption.

### 6.2.4 Taps & fittings

All taps and fittings incorporated into the unvented system should have a rated operating pressure of 7 bar or above.

## 6.3 Primary, Renewable & Tertiary Circuits

The working pressure and temperature for all heat exchanger coils is given in Table 1. All connection to the cylinder must be made using compression fittings.

### 6.3.1 Safety thermostat

Each heat exchanger coil has an associated combined control & safety thermostat. The system controls must be wired in such a manner as to cut off the flow of heat to the cylinder in the event of overheating in order to comply with Building Regulations and to ensure a safe installation. This is typically achieved using a motorised valve wired in series with the thermostat. Refer to Section 6.10 for suggested wiring schematics.

### 6.3.2 Motorised valve

A motorised valve is supplied with all Indirect, Twin Coil & Triple Coil models. This must be fitted to the pipework supplying the primary coil (usually the coil connected to the boiler) and wired in series with the combined control & safety thermostat in order to comply with Building Regulations and to ensure a safe installation. In this manner, if the boiler malfunctions and produces excess heat, the motorised valve will close preventing the cylinder from overheating. Refer to Section 6.10 for suggested wiring schematics.

⚠ Uncontrolled solid fuel boilers and gravity circulation systems must not be used with an unvented hot water system. For guidance on connecting a controllable solid fuel appliance (such as a wood pellet stove or boiler) to an unvented cylinder, reference should be made to the appliance manufacturer's instructions and to Building Control.

### 6.3.3 Solar installations

If connecting a solar thermal installation, for example, to the renewable coil of a Twin Coil, Triple Coil or Eco Direct model, the controls must be wired in series with the combined control & safety thermostat. If using a solar pump station with check valves to prevent gravity circulation, a motorised valve may not be required. Refer to the appliance manufacturer's instructions and to Building Control for further guidance. Additional motorised valves (not supplied) may be required.

## 6.4 Tundish

The tundish supplied must be fitted so it is visible to the occupier, away from electrical equipment, and must be connected with copper pipe (not plastic). Guidance on the Building Regulations requirements for the discharge pipework is provided in Section 6.8.

## 6.5 Expansion Vessel

An expansion vessel is supplied as part of the unvented kit and must be connected to the pipework between the inlet group and the cylinder in order to accommodate expansion of the stored water due to heating. For ease of installation a dedicated expansion vessel port is provided on the body of the inlet group itself.

Ensure the expansion vessel is mounted with the connection at the bottom and that access is left available for future servicing and removal.

Where a secondary return circuit is used, increased expansion capacity may be required.

## 6.6 Hard water

In areas with moderately hard water, choosing a lower control thermostat temperature can result in less scale being deposited within the cylinder. Where water hardness in excess of 200mg/litre is experienced, a suitable and effective hard water treatment must be installed. A devise rated for a flow rate of 50 litres per minute is recommended in order to maintain maximum performance.

## 6.7 Pipework Configurations

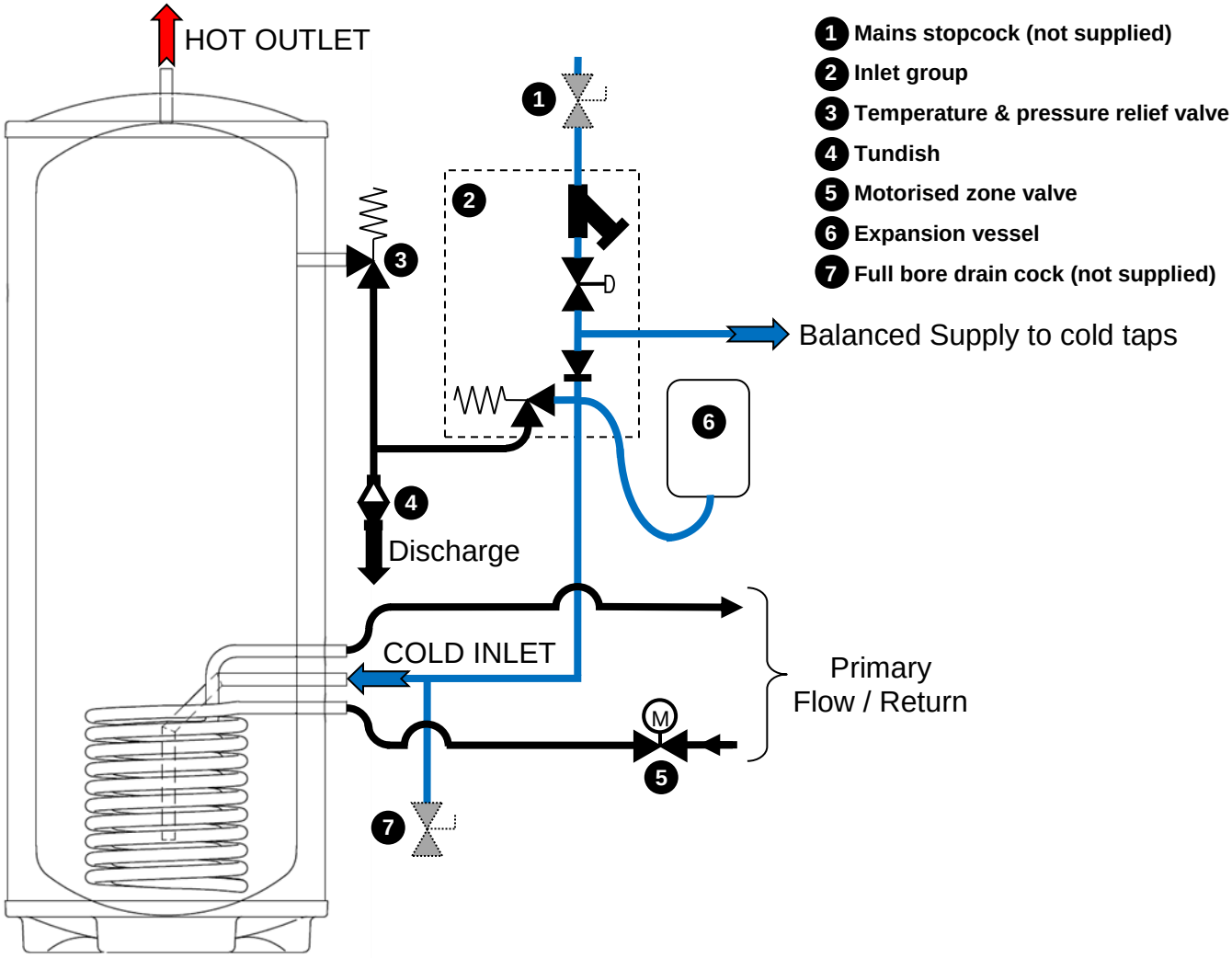


**Figure 6: Typical pipework configuration**

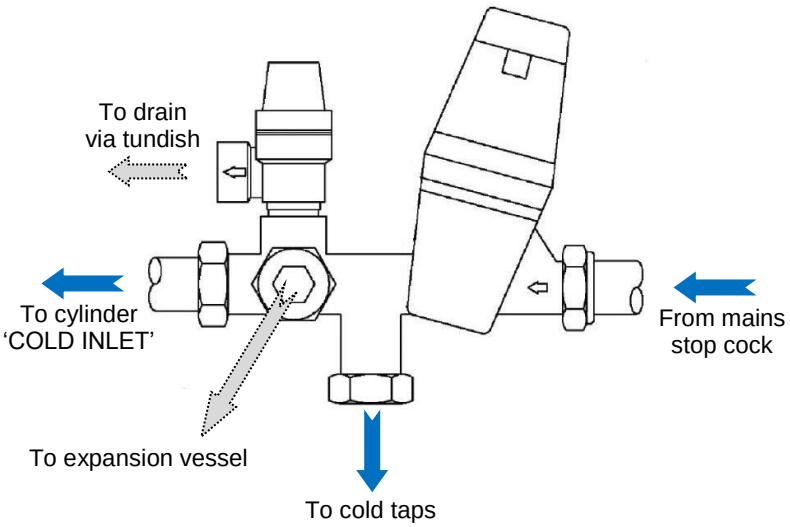


**Figure 7: Inlet group connections**

## 6.8 Discharge Pipework

The following is an extract from Section G3 of the Building Regulations for England and Wales and provides the most up-to-date guidance on the requirements for discharge pipework. Refer also to Figure 8.

### Discharge Pipe D1

**3.50** Safety devices should discharge either directly or by way of a manifold via a short length of metal pipe (D1) to a tundish.

**3.51** The diameter of discharge pipe (D1) should be not less than the nominal bore of the safety device.

**3.52** Where a manifold is used it should be sized to accept and discharge the total discharge from the discharge pipes connected to it.

**3.53** Where valves other than a temperature and pressure relieve valve from a single unvented hot water system discharge by way of the same manifold that is used by the safety devices, the manifold should be factory fitted as part of the hot water storage system unit or package.

### Tundish

**3.54** The tundish must be vertical, located in the same space as the unvented hot water storage system and be fitted as close as possible to, and lower than, the safety device, with no more than 600mm of pipe between the valve outlet and the tundish (see Figure 8).

**Note:** To comply with the Water Supply (Water Fittings) Regulations, the tundish should incorporate a suitable air gap.

**3.55** Any discharge should be visible at the tundish. In addition, where discharges from safety devices may not be apparent, e.g. in dwellings occupied by people with impaired vision or mobility, consideration should be given to the installation of suitable safety device to warn when discharge takes place, e.g. electronically operated.

### Discharge Pipe D2

**3.56** The discharge pipe (D2) from the tundish must:

a. have a vertical section of pipe at least 300mm long below the tundish before any elbows or bends in the pipework (see Figure 8); and
b. be installed with a continuous fall of at least 1 in 200 thereafter.

**3.57** The discharge pipe (D2) should be made of:

a. metal; or
b. other material that has been demonstrated to be capable of safely withstanding temperatures of the water discharged and is clearly and permanently marked to identify the product and performance standard (e.g. as specified in the relevant part of BS 7291-1:2006).

**3.58** The discharge pipe (D2) should be at least one pipe size larger than the nominal outlet size of the safety device unless its total equivalent hydraulic resistance exceeds that of a straight pipe 9m long, i.e. for discharge pipes between 9m and 18m the equivalent resistance length should be at least two sizes larger than the nominal outlet size of the safety device, and so on; bends must be taken into account in calculating the flow resistance. See Figure 8, Table 7 and the worked example.

**Note:** An alternative approach for sizing discharge pipes would be to follow Annex D, Section D.2 of BS 6700:2006 + A1:2009.

**3.59** Where a single common discharge pipe serves more than one system, it should be at least one pipe size larger than the largest individual discharge pipe (D2) to be connected.

**3.60** The discharge pipe should not be connected to a soil discharge stack unless it can be demonstrated that the soil discharge stack is capable of safely withstanding temperatures of the water discharged, in which case, it should:

a. contain a mechanical seal, not incorporating a water trap, which allows water into the branch pipe without allowing foul air from the drain to be ventilated through the tundish;
b. be a separate branch pipe with no sanitary appliances connected to it;
c. if plastic pipes are used as branch pipes carrying discharge from a safety device, they should be either polybutalene (PB) or cross-linked polyethylene (PE-X) complying with national standards such as Class S or BS 7291-2:2006 or Class S of BS 7291-3:2006 respectively; and
d. be continuously marked with a warning that no sanitary appliances be connected to the pipe.

**Notes:**

1. Plastic pipes should be joined and assembled with fittings appropriate to the circumstances in which they are used as set out in BS EN ISO 1043-1:2002.
2. Where pipes cannot be connected to the stack it may be possible to route a dedicated pipe alongside or in close proximity to the discharge stack.

**Termination of Discharge Pipe**

**3.61** The discharge pipe (D2) from the tundish should terminate in a safe place where there is no risk to persons in the vicinity of the discharge.

**3.62** Examples of acceptable discharge arrangement are:

a. to a trapped gully with the end of the pipe below a fixed grating and above the water seal;
b. downward discharges at low level; i.e. up to 100mm above external surfaces such as car parks, hard standings, grassed areas, etc. are acceptable providing that a wire cage or similar guard is positioned to prevent contact, whilst maintaining visibility; and,
c. discharges at high level: e.g. into a metal hopper and metal downpipe with the end of the discharge pipe clearly visible or onto a roof capable of withstanding the temperature discharges of water and 3m from any plastic guttering system that would collect such discharges.

**3.63** The discharge would consist of high temperature water and steam. Asphalt, roofing felt and non-metallic rainwater goods may be damaged by such discharges.

The discharge pipe within the building is to be located within a frost free environment.

### 6.9 Worked Example

The example below is for a G½" temperature relief valve with a discharge pipe (D2) having 4 no. elbows and a length of 7m from the tundish to the point of discharge. The calculation shows that 22mm pipe would be **unacceptable**.

## UNACCEPTABLE

**Discharge pipe (D2) run in 22mm copper:**

Length of straight pipe = 7.0m
Resistance created by bends (0.8m x 4) = 3.2m
Total resistance of discharge pipe = 10.2m

Maximum resistance allowed for a 22mm copper discharge pipe (D2) from a G½" temperature relief valve is 9.0m, which is less than 10.2m.

Therefore, installation **unacceptable**:
Discharge pipe (D2) needs to be *larger* than 22mm.

## ACCEPTABLE

**Discharge pipe (D2) run in 28mm copper:**

Length of straight pipe = 7.0m
Resistance created by bends (1.0m x 4) = 4.0m
Total resistance of discharge pipe = 11.0m

Maximum resistance allowed for a 28mm copper discharge pipe (D2) from a G½" temperature relief valve is 18.0m, which is more than 11.0m.

Therefore, installation **acceptable**:
Discharge pipe (D2) *can* be run in 28mm.

| Valve outlet size | Minimum size of discharge pipe D1 | Minimum size of discharge pipe D2 from tundish | Maximum resistance allowed, expressed as a length of straight pipe (i.e. no elbows or bends) | Resistance created by each elbow or bend |
|---|---|---|---|---|
| G½" | 15mm | 22mm | Up to 9m | 0.8m |
| | | 28mm | Up to 18m | 1.0m |
| | | 35mm | Up to 27m | 1.4m |

**Note:** Data provided for G½" outlet size and copper pipework only. Other outlet sizes and pipe materials should be calculated using data prepared for the size and type of pipe being used.

**Table 7: Sizing of copper discharge pipe (D2) for G½" valve outlet**

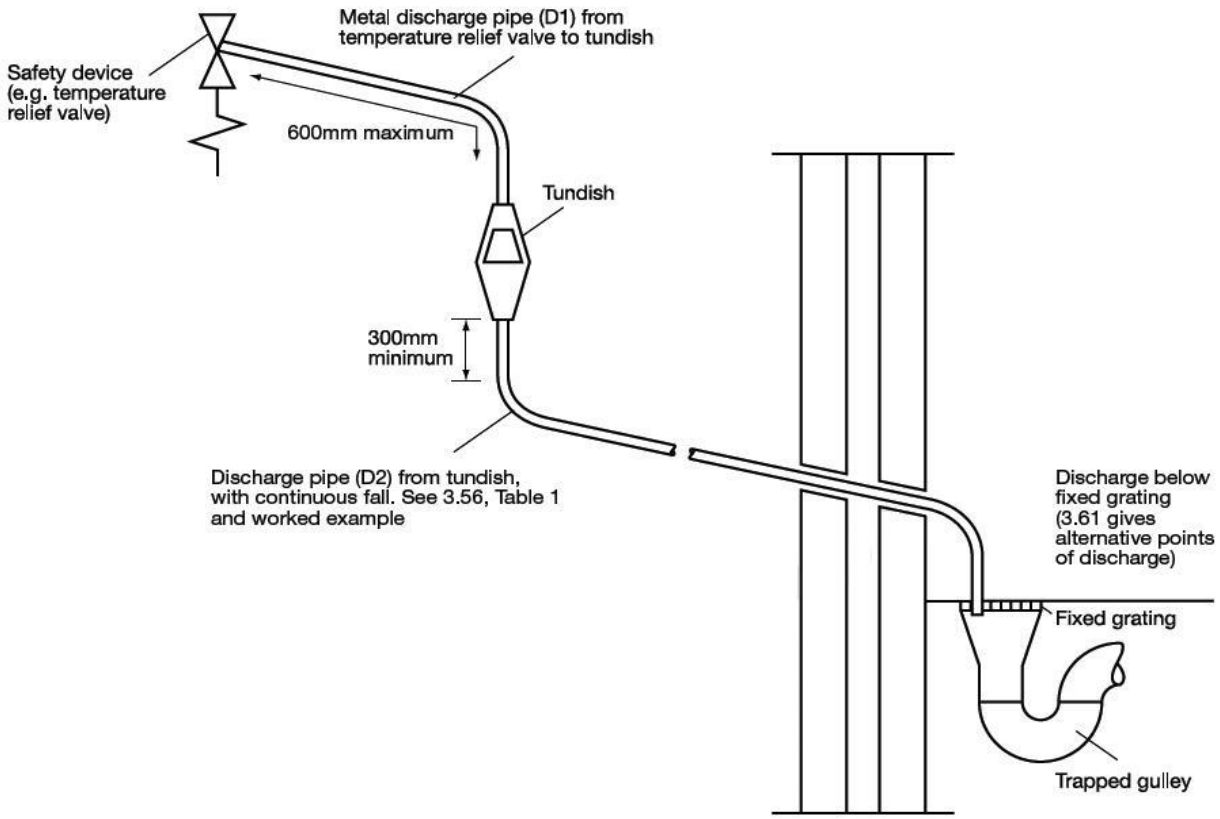


**Figure 8: Typical discharge pipe arrangement**

## 6.10 Electrical Installation

6.10.1 Cylinder thermostats

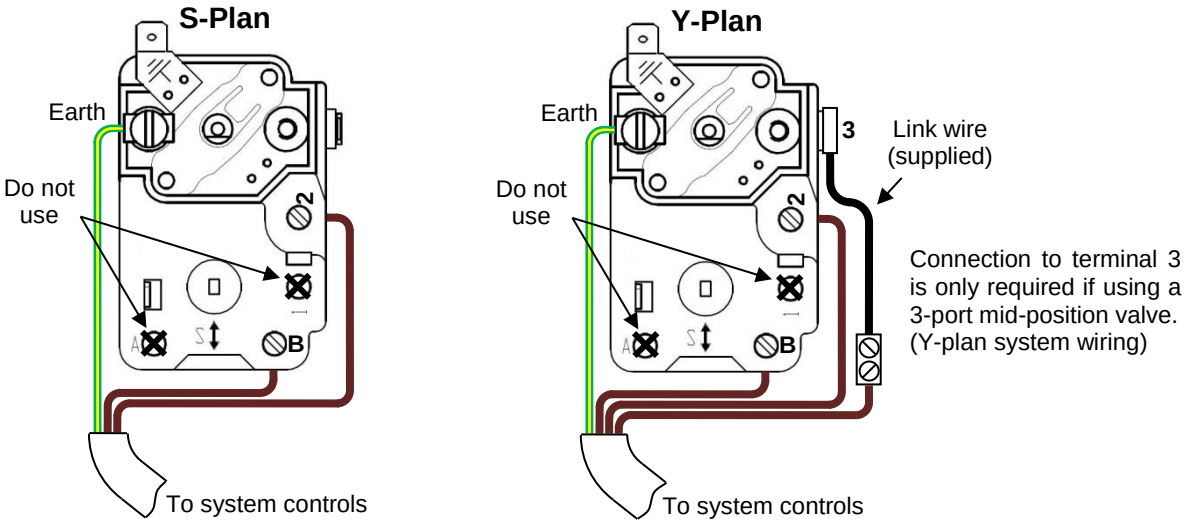


**Figure 9: Control thermostat wiring**

6.10.2 Immersion heater(s)

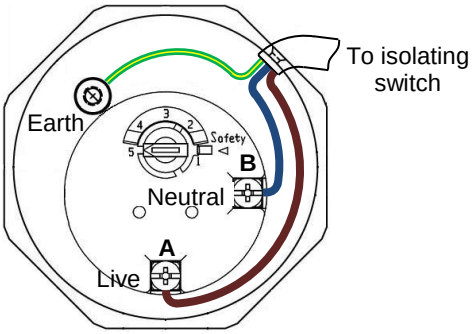


**Figure 10: Immersion heater wiring**

6.10.3 Solar temperature sensors

Solar sensors should be located in the pocket(s) behind the cylinder thermostat(s). Remove the thermostat cover and base. Pass the sensor through the base then insert downwards into the pocket as shown in Figure 11. Anchor the cable using the clamp provided. A stand-alone pocket is provided on Eco Direct models only.

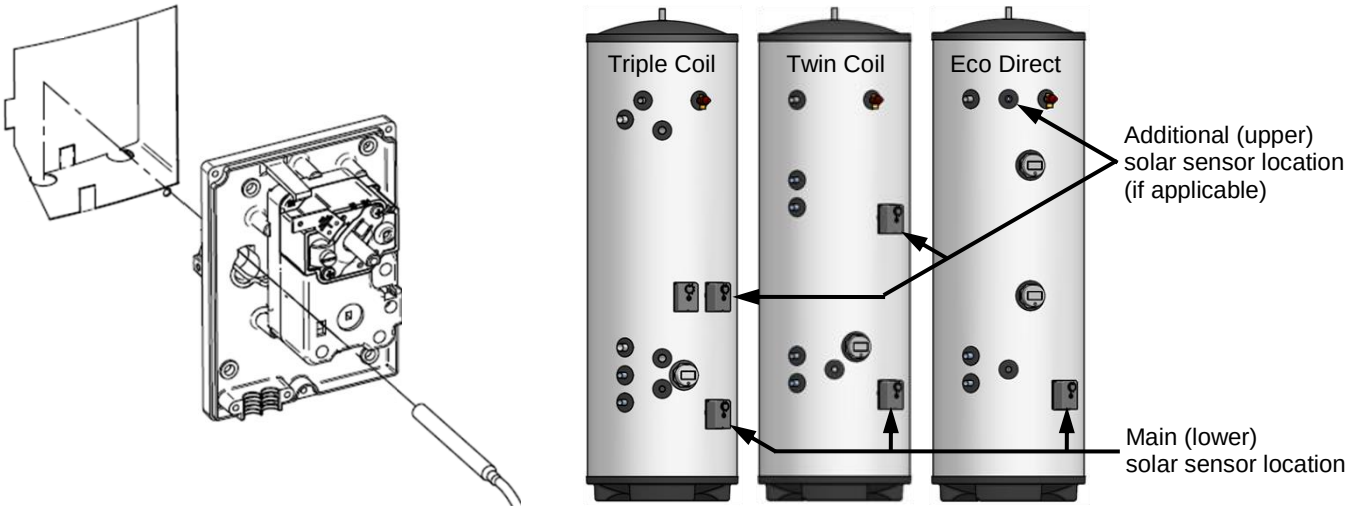


**Figure 11: Solar sensor installation**

## 6.10.4 System controls

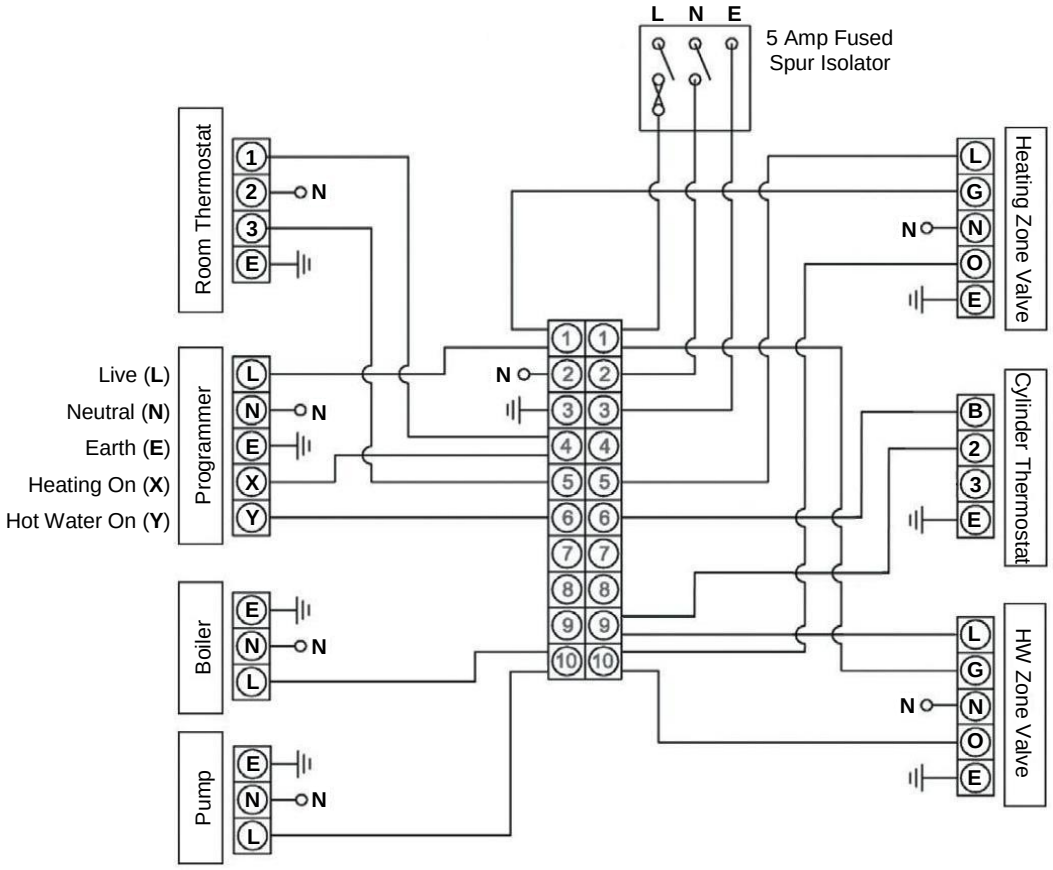


**Figure 12: S-plan system wiring**

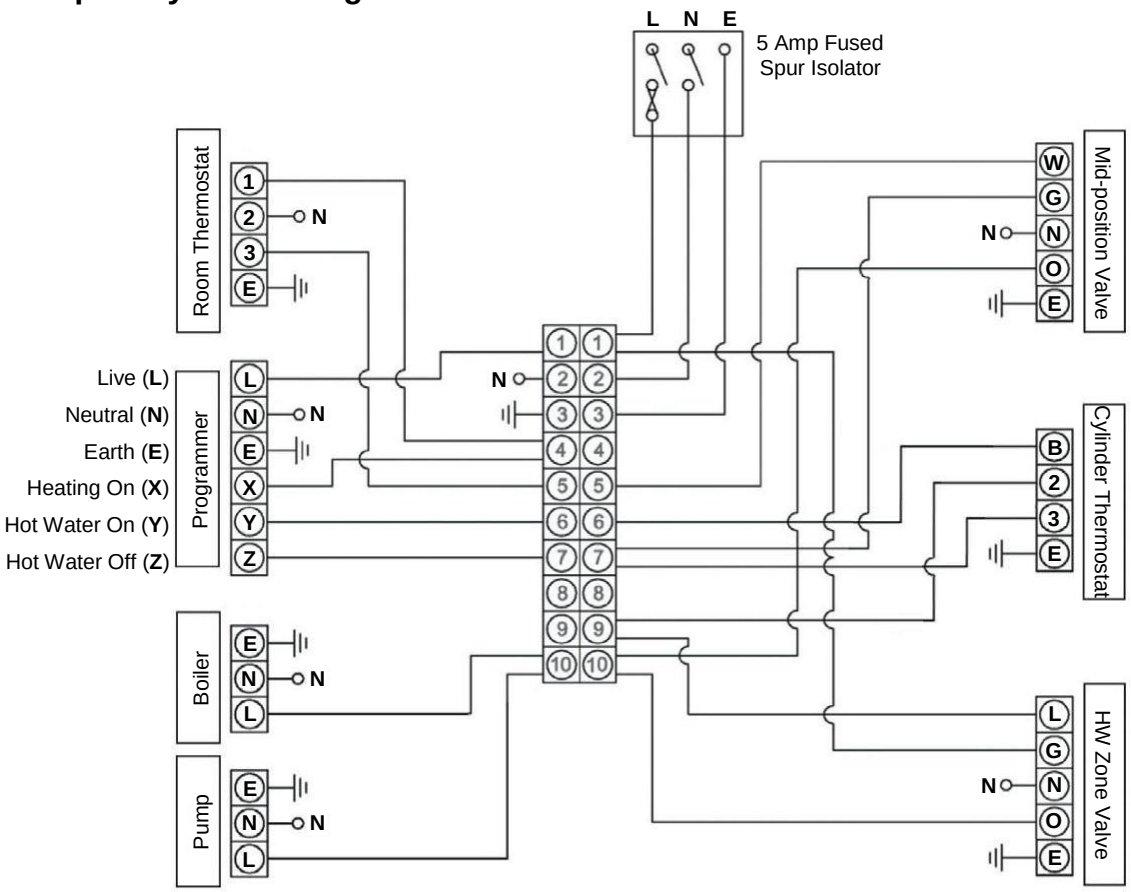


**Figure 13: Y-plan system wiring**

# 7 COMMISSIONING

The appliance and installation must be commissioned as described below and the Cylinder Passport completed and returned to the manufacturer along with proof of purchase.

**FAILURE TO COMMISSION, REGISTER AND ANNUALLY SERVICE THIS PRODUCT WILL INVALIDATE ALL GUARANTEES**

⚠ Isolate all electrical supplies until otherwise instructed during the commissioning process.

1 Prior to filling the cylinder (or with the mains isolated and a hot tap open), check the expansion vessel bladder pre-charge – it should be 3.0 bar.

2 Check that all connections are tight and correctly configured.

3 Fill the cylinder and system as follows:

Open the main stopcock and fill the cylinder.

Open successive hot taps.

Leave each tap open for a few minutes in order to flush out air and debris.

Close all taps.

4 Drain the cylinder as described in Section 7.1 below.

5 Refill the cylinder as above, closing each tap when water flows freely.

6 Manually operate (by rotating the knob) both the expansion relief and the temperature and pressure relief valves for a short period to remove trapped air from behind the valve seat and to prove the correct function of the discharge arrangement.

7 Check all joints for leaks and rectify as necessary.

8 Check that all immersion and control thermostats are set to the desired temperature.

9 Commission each primary circuit as follows (not applicable to Direct models):

Fill each primary circuit (e.g. boiler, heat pump or solar circuits) following each heat source manufacturers' instructions.

Check for leaks in each primary circuit and rectify as necessary.

Commission each heat source in accordance with the manufacturer's instructions activating the system controls as required.

10 Activate each heat source to confirm that the system controls function correctly.

11 Check that, while the cylinder is heating up, no water exits from either the expansion relief or the temperature and pressure relief valves, and that the system controls deactivate all heat sources when the cylinder is up to temperature.

## 7.1 Draining

⚠ Isolate all electrical supplies before draining the cylinder / secondary (hot water) circuit.

1 Close the main stopcock.

2 Connect hose to the drain cock and route to a suitable discharge.

3 Open the drain cock.

4 Open the hot water tap nearest the cylinder. If water fails to drain, vent the system by opening the temperature and pressure relief valve.

**5** Allow the system to drain fully then close the drain cock when complete.

# 8 MAINTENANCE

⚠ Isolate all electrical supplies before removing any components for inspection or repair, or before draining the cylinder or heat source circuits.

## 8.1 Regular Maintenance

This appliance must be serviced annually to ensure continued safe operation and to maintain the guarantee. Servicing must be undertaken by a competent person i.e. qualified professional.

1. Isolate the mains water supply and open a hot tap. Check the expansion vessel bladder pre-charge – it should be 3.0 bar.
2. Check the strainer on the inlet group. Clean the strainer if necessary by unscrewing the pressure reducing valve and withdrawing the strainer.
3. Check and service all hard water treatment devices (if fitted) in accordance with each device manufacturer's instructions.
4. Check that all connections are tight and correctly configured.
5. Manually operate (by rotating the knob) both the expansion relief and the temperature and pressure relief valves to prove the correct function of the discharge arrangement.
6. Check all joints for leaks and rectify as necessary.
7. Check that all immersion and control thermostats are appropriately set.
8. Activate each heat source to confirm that the system controls function correctly.
9. Check that, while the cylinder is heating up, no water exits from either the expansion relief or the temperature and pressure relief valves, and that the system controls deactivate all heat sources when the cylinder is up to temperature.

## 8.2 Inspection Access

Where necessary, the internal components of the cylinder can be inspected by means of the immersion heater boss (1¾") using an appropriate inspection tool e.g. boroscope.

## 8.3 Replacement Parts

| Part description | Code |
|---|---|
| Cylinder thermostat | WDS6 |
| Immersion heater c/w stat (1¾") | 3602 |
| Motorised valve (22mm) | 3603 |
| T&P valve (½" x 15mm) | 3654 |
| Inlet group (22mm) | 3890 |
| Expansion vessel (12 litres) | 3891 |
| Expansion vessel (19 litres) | 3892 |
| Expansion vessel (24 litres) | 3893 |
| Tundish (15mm x 22mm) | 3670 |

## 8.4 Fault Finding

| Symptom | Possible cause | Possible remedy |
|---|---|---|
| **Little / no hot water flow** | Mains water supply isolated | Open stopcock. |
| | Strainer blocked | Turn water supply off, remove strainer and clean. |
| | Pressure reducing valve fitted the wrong way | Refit with arrow pointing in direction of flow (refer to Figure 7). |
| **Water from hot taps is cold** | Boiler programmer or immersion timer not calling for hot water | Set programmer / timer to call. |
| | Cylinder thermostat high limit tripped or immersion thermostat high limit tripped | Check and reset (refer to Section 1). |
| | Heat source malfunction (e.g. boiler / immersion heater / etc) | Check heat source – if faulty, refer to heat source manufacturer's instructions. |
| | Motorised valve malfunction (where fitted, n/a to Direct models) | Manually activate motorised valve. If cylinder begins to heat, replace valve. |
| | Pump malfunction (n/a to Direct models) | Check wiring and/or plumbing connections to pump. |
| **Intermittent water discharge from tundish** | Expansion vessel has lost its pre-charge | Turn off water supply, open hot tap, check bladder pre-charge and recharge to 3 bar. |
| | Inlet group balanced cold / cylinder connections reversed | Check and reconnect (refer to Figure 7). |
| **Continuous water discharge from tundish** | Pressure reducing valve not working | Check pressure from pressure reducing valve – if greater than 3 bar, replace cartridge. |
| | Expansion relief valve not seating correctly | Manually operate the valve to clear any debris from the seat. |
| | Temperature & pressure relief valve not seating correctly | Manually operate the valve to clear any debris from the seat. |
| | System control / safety feature failure | IMMEDIATELY switch off all power supplies. Contact your installer. |

# 9 GUARANTEE

Warmflow unvented cylinders are supplied with the following guarantees from the date of purchase:

(a) A 25 year guarantee on the duplex stainless steel cylinder body against defects of material.

(b) A 2 year guarantee on all parts and components as well as any defects that may have occurred from time to time during the normal manufacturing process of the cylinder as carried out by those exercising all relevant skill and experience and complying with all relevant legislation, regulations and codes of practice relating to the manufacturing process.

1. The guarantees provided are from the date of purchase and are conditional upon:

   1.1 the unit being installed and commissioned by competent persons in accordance with the manufacturer's instructions and relevant legislation, regulations and codes of practice in force at the time;

   1.2 the product being registered with Warmflow within 30 days of installation and the guarantee registration completed and returned to Warmflow along with evidence of the date of purchase;

   1.3 the unit not being modified in any way, or misused or subject to neglect;

   1.4 the unit being serviced annually by competent persons in accordance with the manufacturer's instructions and all regulations and codes of practice in force at the time;

   1.5 each service record being completed and proof of purchase and servicing being retained and made available to Warmflow in respect of any claim;

   1.6 the unit being used solely for the purpose of heating potable water that complies at all times with EU standards and not fed from a private source.

Failure to comply with any of the conditions outlined in this clause will invalidate the warranty in its entirety.

2. The guarantee is not transferable and excludes:

   2.1 labour costs associated with the replacement of the unit or its components;

   2.2 any defects that appear after the customer makes any modification or alteration to the unit;

   2.3 defects caused by the improper use or storage of the unit and in particular (but without limitation) Warmflow shall not be liable in the case of defects arising from normal deterioration or improper or faulty handling or processing of the unit by the customer;

   2.4 consequential losses however caused.

3. If within the 2 year guaranteed period, as set out at (b) above, a material defect is discovered in the Unit:

   3.1 the customer must send written notification following discovery giving particulars and either at its own expense and risk shall return the unit to Warmflow within 2 weeks of written notice being provided by Warmflow; or (at Warmflow's sole option) shall permit Warmflow to inspect same; and

   3.2 if such defect has arisen from faulty materials employed or workmanship carried out by Warmflow and is existing but not reasonably discoverable upon inspection at the time of receipt then Warmflow shall supply such part(s) free of charge along with the costs of transporting same to the customer.

   3.3 The replacement parts must be fitted in accordance with the terms of the guarantee set out above.

   3.4 The replacement parts shall be covered under this guarantee for the remainder of the unexpired term of two years.

   3.5 Invoices for call out and/or repair by any third party or parts supplied by a third party will not be accepted unless previously authorised by Warmflow in writing.

4 Warmflow's liability for defective units is limited in all circumstances to delivery of parts for the defective unit and the customer shall accept same as fulfilment of Warmflow's obligations.

5 Warmflow disclaims all other warranties whether express, implied or statutory. Your statutory rights are not affected.

6 This guarantee applies to Warmflow cylinders installed on the UK mainland (excluding Scottish Isles), Isle of Man, Channel Islands, Northern Ireland and Republic of Ireland only. Provision of in warranty cover elsewhere is subject to the agreement in writing of Warmflow.

# 10 END-OF-LIFE INFORMATION

Warmflow Unvented Cylinders must be disposed of according to local regulations by using a public or private waste collection service.

## 10.1 Safety Risks

Prior to disassembly, the appliance should be electrically isolated and disconnected.

Any fluids within the appliance must be drained, and disposed of in-line with local regulations.

Care should be taken when handling the appliance due to weight, use appropriate PPE and lifting aids.

Polyisocyanurate foam insulation – suitable PPE should be used for respiration protection, and to avoid skin or eye contact.

## 10.2 Disassembly of the Product

The main materials of the components are:

- Mild Steel
- Stainless Steel
- Polyisocyanurate Foam
- Plastic Components
- Electronic Components

These may be recycled – depending on the local recycling facilities available.

The appliance is assembled by using mechanical fasteners and can be disassembled with standard tools.

The components of a typical appliance are shown below (not all components may be fitted, depending on appliance specification)

## 10.3 Casing and key components

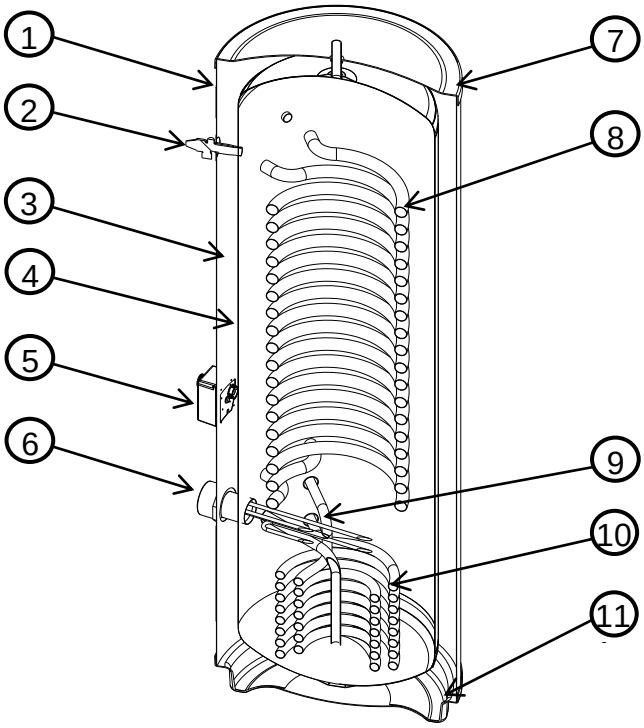


**Figure 14: Key Component Diagram**

| Item | Description | Main Materials | Special Notes |
|---|---|---|---|
| 1 | Casing | Coated Galvanised Steel | |
| 2 | T&P Relief Valve | Plastic, Brass | Consult Component Manufacturer |
| 3 | Foam Insulation | Polyisocyanurate Foam | Wear Appropriate PPE |
| 4 | Storage Tank | Stainless Steel | |
| 5 | Thermostat Housing | Plastic, Copper, Electronic Components | |
| 6 | Immersion Heater | Plastic, Brass, Incoloy, Electronic Components | Consult Component Manufacturer |
| 7 | Casing Top | Plastic | |
| 8 | Heating Coils | Stainless Steel | |
| 9 | Dip Pipe | Stainless Steel | |
| 10 | Solar Coil | Stainless Steel | |
| 11 | Casing Base | Plastic | |
| Others | Expansion Vessel | Steel, Rubber, Brass | Consult Component Manufacturer |

Various other brackets, fasteners and components may be used, with up to 5% of appliance weight.

BLANK PAGE

BLANK PAGE

WARMFLOW

**WARMFLOW Engineering Company Limited**
Lissue Industrial Estate, Moira Road, Lisburn BT28 2RF
Tel: 028 9262 1515  Fax: 028 9262 0869

**WARMFLOW Customer Care Centre**
UK: 028 9262 1515  ROI: 048 9262 1515
Email: service@warmflow.co.uk



**3683 rev 04  March 2016**